Brilliant
THE JEWEL IN LIGHTING

Carmen
98992...
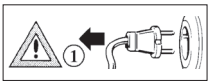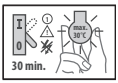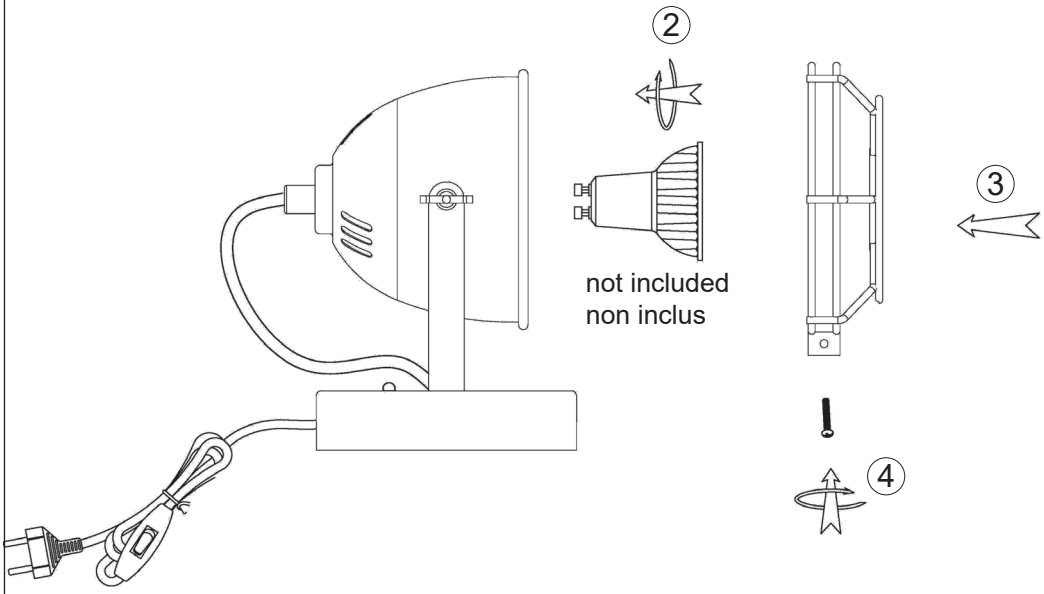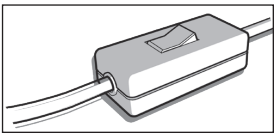
06.17