Brilliant
THE JEWEL IN LIGHTING

Padget
99085...

01.19

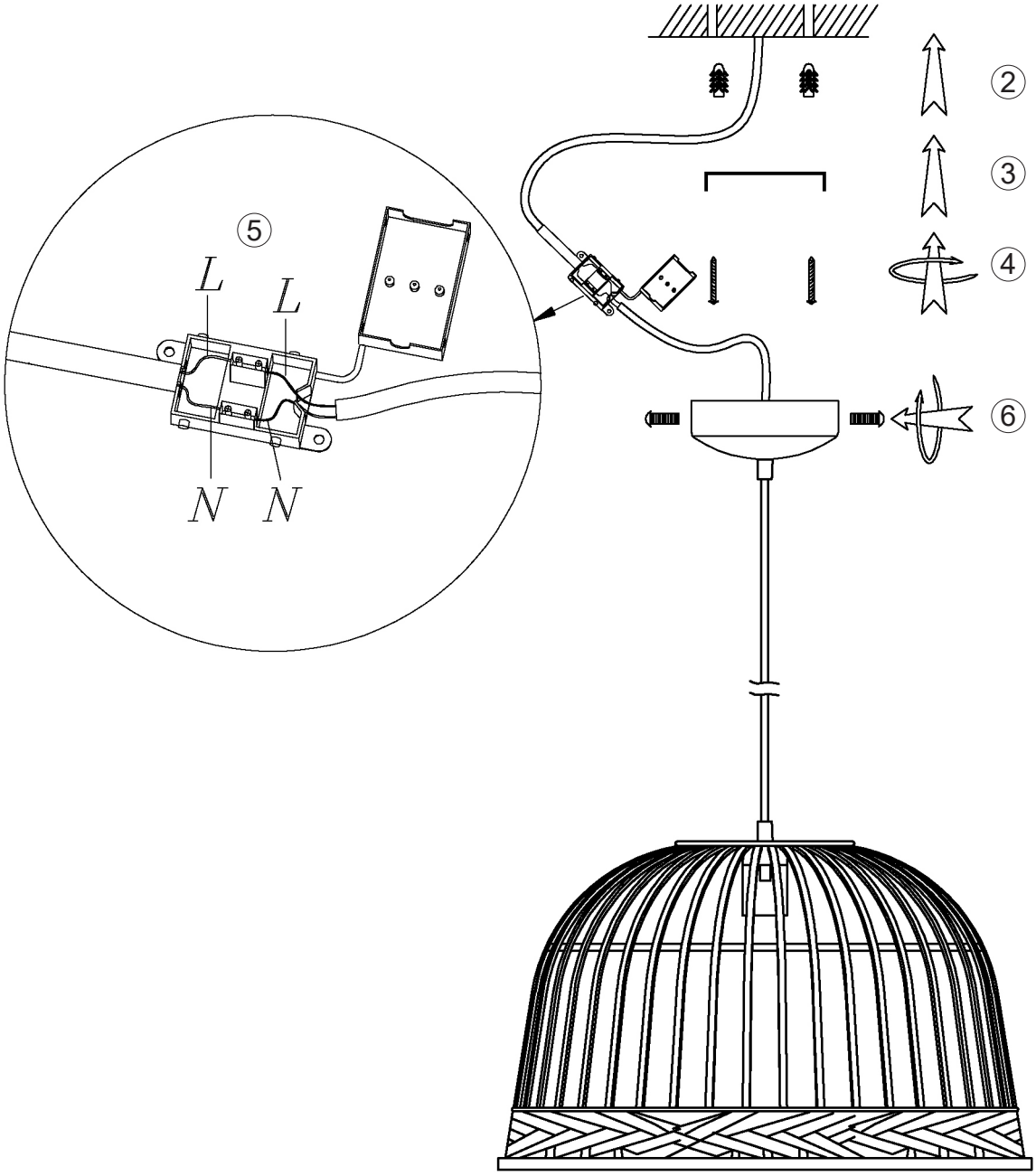

No incl.